OVERALL ASSEMBLY DIMENSIONS:

EXTERNAL - 143.3 x 67.3 x 40

INTERNAL - 116.4 x 61.4 x 36.2

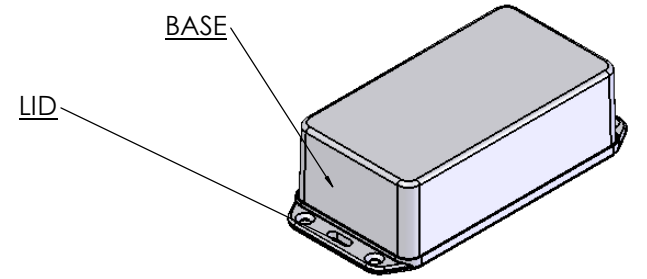

ISO VIEW
1:3

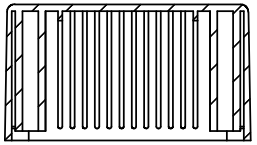

SECTION A-A

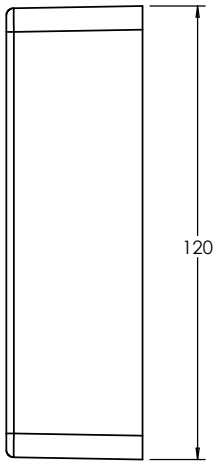

BASE

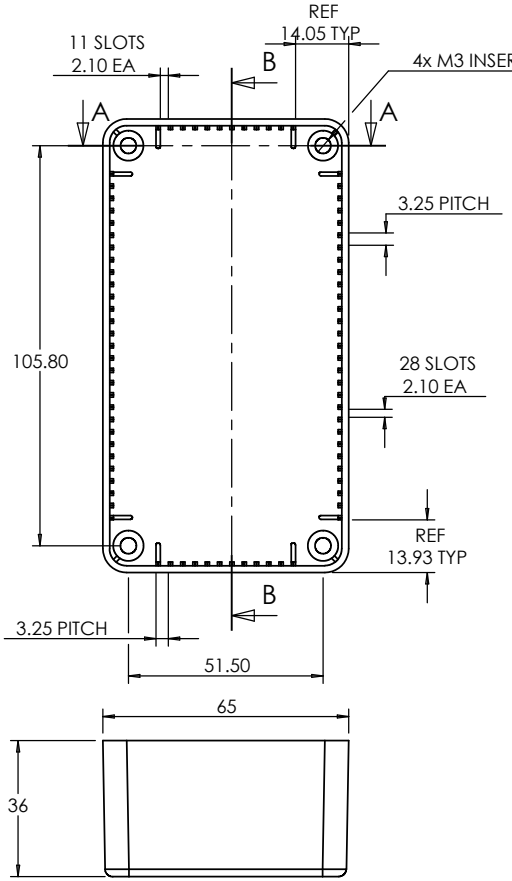

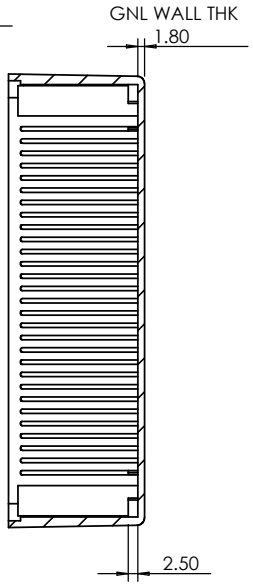

SECTION B-B

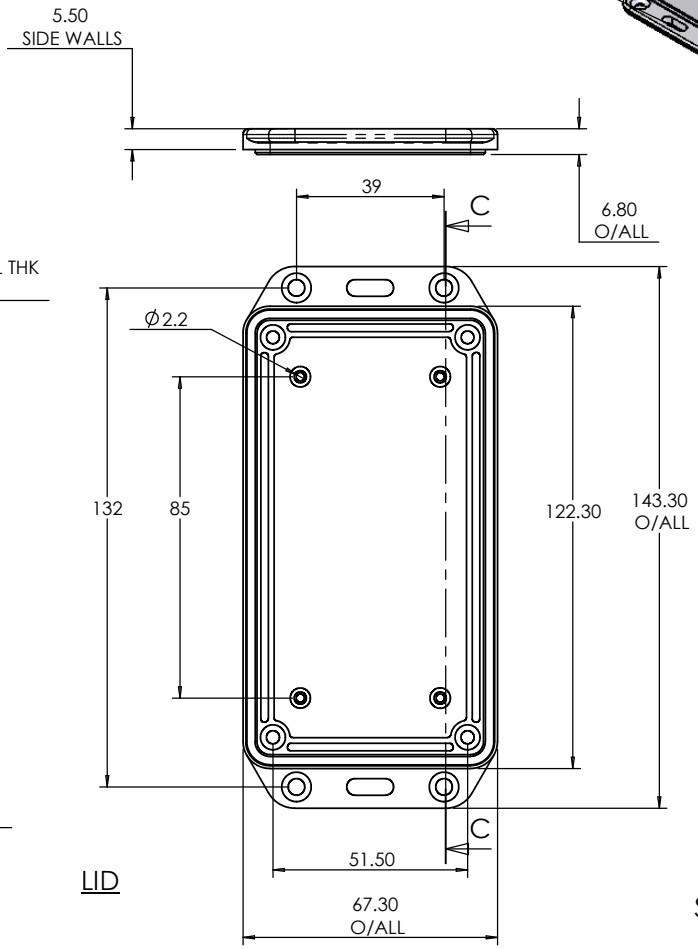

LID

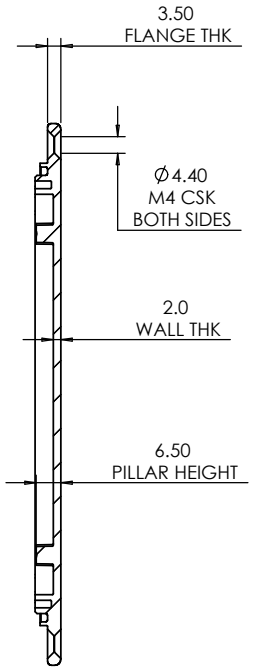

SECTION C-C

BOSS ENCLOSURES JAMES CARTER RD, MILDENHALL, SUFFOLK. IP28 7DE TEL: 01638 716101 FAX: 01638 716554 EMAIL: SALES@BOSS-ENCLOSURES.CO.UK WEB: www.BOSS-ENCLOSURES.CO.UK				UNLESS OTHERWISE SPECIFIED: DIMENSIONS ARE IN MILLIMETERS	DO NOT SCALE DRAWING	REVISION. O
				FINISH. SMOOTH	TITLE: GNL ASSY DRG FOR IP 2000-SERIES ENCLOSURE	
	NAME	SIGNED	DATE	MATERIAL. ABS	DWG NO. 2004-IP	A4
DRAWN	SUBKHANKULOVA	LS	27/02/09			
CHK'D	-	-	-	PROJECTION.	SCALE. 1 : 2	SHEET 1 OF 1