OVERALL ASSEMBLY DIMENSIONS:

EXTERNAL - 118.9 x 93.6 x 56.3

INTERNAL - 114.3 x 89 x 52.1

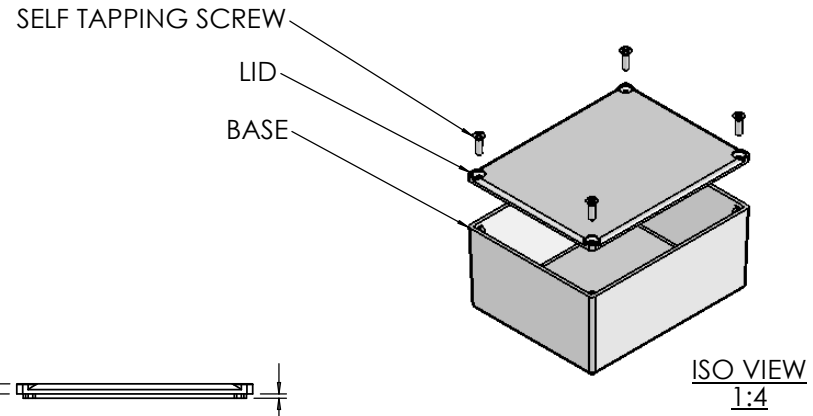

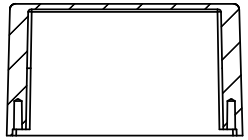

SECTION B-B

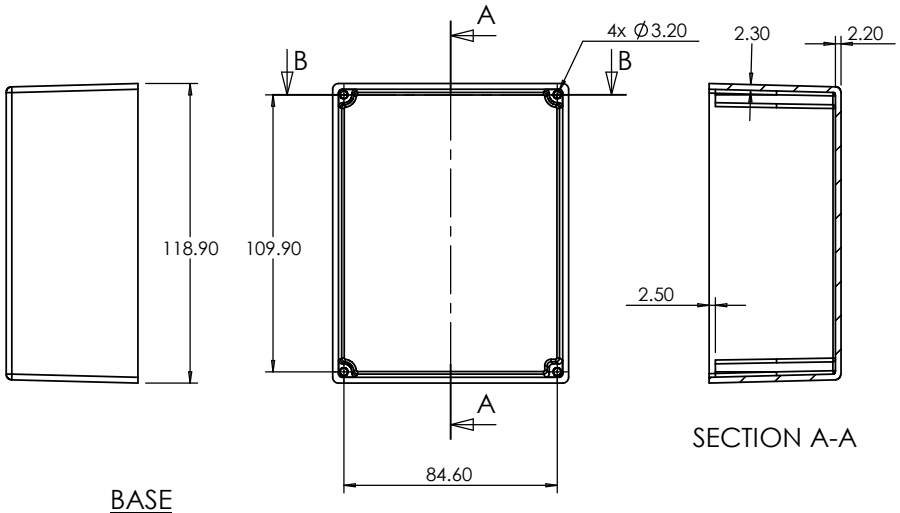

BASE

SECTION A-A

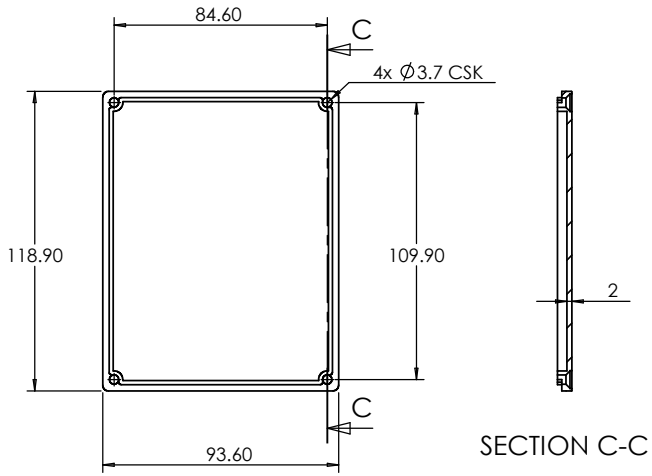

SECTION C-C

LID

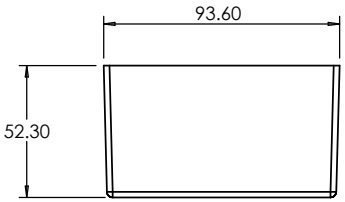

BOSS ENCLOSURES
JAMES CARTER RD, MILDENHALL, SUFFOLK. IP28 7DE
TEL: 01638 716101 FAX: 01638 716554
EMAIL: SALES@BOSS-ENCLOSURES.CO.UK
WEB: www.BOSS-ENCLOSURES.CO.UK

	NAME	SIGNED	DATE
DRAWN	S.HARDINGE	SJH	09/12/05
CHK'D	-	-	-

UNLESS OTHERWISE SPECIFIED: DIMENSIONS ARE IN MILLIMETERS

FINISH. SMOOTH

MATERIAL. DIE-CAST ALUMINIUM

PROJECTION.

DO NOT SCALE DRAWING

REVISION. O

TITLE: ASSEMBLY DRG FOR 5100-234

DWG NO. 5100-234

A4

SCALE. 1 : 3

SHEET 1 OF 1